IL series

Centrifugal marine “IN-LINE” pumps

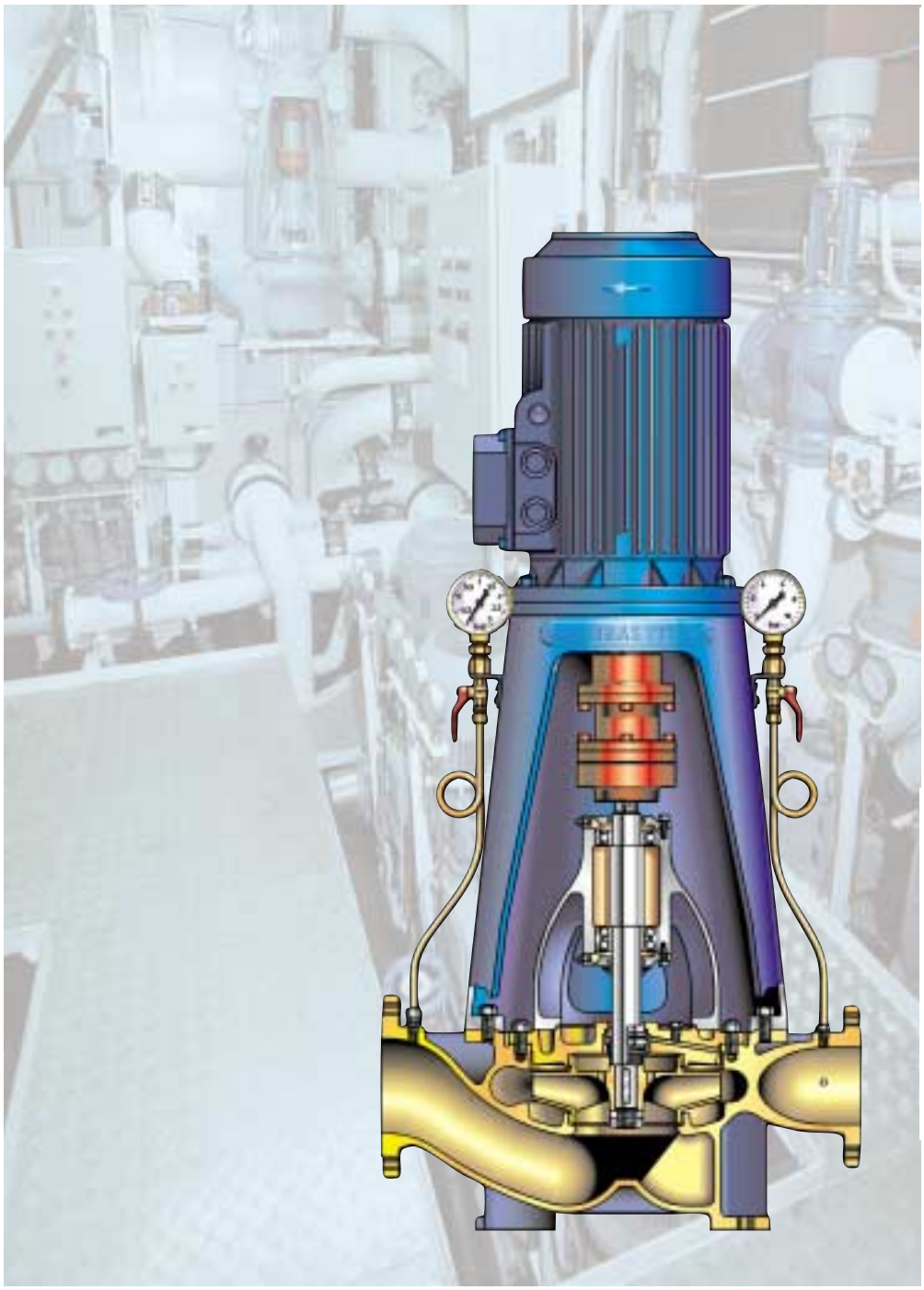

PUMPS

ITUR

DESCRIPTION

Vertically built centrifugal IN-LINE pumps are made with standardized DIN-24255 parts, with in-line suction and discharge flanges. This arrangement requires very limited installation space, making space-saving a great advantage in the layout design of pumps in the engine room.

The flexible coupling design with spacer between pump and motor allows for easy and handy maintenance, since the internal parts of the pump can be reached without the need to remove any pipes or motor parts.

In the compact version, with no spacer connection (ILC), dismantling is just as easy, offering the same advantages in terms of access.

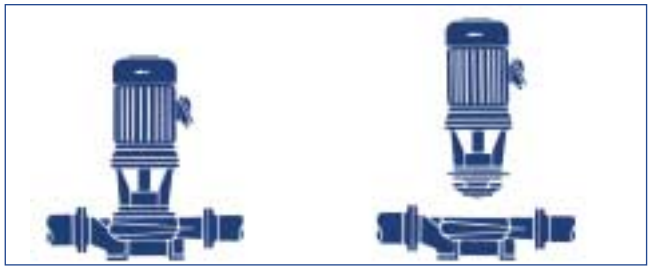

APPLICATIONS

The ITUR Pumps **IL(S)** and **ILC(S)** series are generally used with clean or slightly laden liquids (fresh water, saltwater, etc) and are very suitable for a wide variety of tasks aboard a vessel:

Cooling of main and auxiliary engines
Bilge
Ballast
Fire fighting
Cargo tanks cleaning
Inert gas seal and cooling
Brine circulation
Deck washing
S.W. fishing park
Cooling and air conditioning

As there are several possible implementations, these pumps can also be used in land-based industry, water supply and irrigation, particularly in cases where there are space-saving needs in the pumping station.

SERIES RANGE

The series comprises 36 different sizes of pumps, and can be supplied in four versions of construction:

- **IL series**, with flexible coupling with spacer between pump and motor
- **ILS series**, same as IL series but with automatic priming system
- **ILC series**, compact with rigid connection between pump and motor
- **ILCS series**, same as ILC series but with automatic priming system

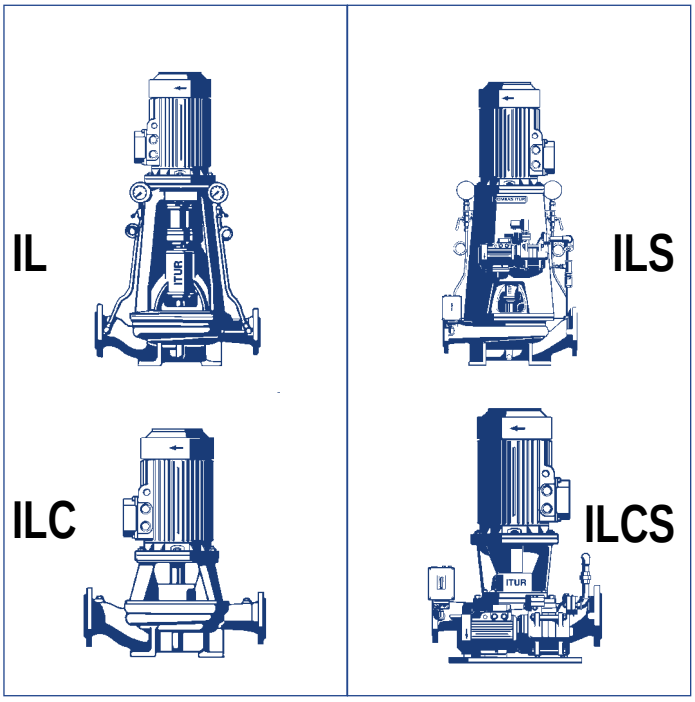

Service specifications

- Maximum flow: 875 m3/h
- Maximum manometric height: 100 m.c.a.
- Maximum turning speed: 3,600 rpm
- Maximum temperature: 140ºC
- Maximum casing pressure: 10 bar

CONSTRUCTION

- Spiral **casing** with in-line suction and discharge flanges.
- Closed **impeller** with axial compensation holes.
- Wear rings in **pump casing** and cover.
- DIN-2501 PN-10 **flanges**, with RF finish, in accordance with DIN-2526 form C; alternatively these can be supplied according to other standards.
- Mechanical **seal**.
- Lubricated amply-sized **bearings**.
- I.E.C. in V-1 (vertical) standardized electric **motor**.

These are particularly sturdy pumps. The **IL and ILS** versions have a two-bearing support, whereas the compact versions (**ILC and ILCS**) come with an intermediate bearing independent from the actual motor bearings.

STANDARDIZED MATERIALS

Depending on the type of service and fluids to be pumped, there are different standardized materials:

Ref.	Component	USE		
		1200 GG-25	1201 MIXTED	1203 BRONZE
102	Pump casing	GG-25	GG-25	RG-5
161	Pump cover	GG-25	GG-25	RG-5
210	Pump shaft	AISI-431B	AISI-316L	AISI-316L
230	Impeller	GG-25	GSnBz10	GSnBz10
502.1	Wear ring, casing	GG-25	RG-7	RG-7
502.2	Wear ring, cover	GG-25	RG-7	RG-7

ILS - ILCS SELF-PRIMING SERIES

The ILS and ILCS series pumps come with an automatic priming system via an auxiliary liquid ring self-priming pump connected to the main pump.

Upon starting up the pump the electrovalve (4) opens and starts up the auxiliary priming pump (2), which does its job by starting to extract the air in the intake pipes and discharging it through the electrovalve (4). The air outlet (7) should be connected to a suitable drainage area.

At the same time, a timer is activated, which after a certain amount of time, gives the start up order to the main pump, with both pumps working jointly.

When the water reaches the main pump the pressure is increased; this is detected by the pressure switch (5). When it reaches the preset value a second timer is activated, which, after a preset time, disconnects the electrovalve and the auxiliary pump.

The timers, as well as the relays and necessary control switchgears, should be integrated in the electric panel.

Hence, in the course of a work cycle the auxiliary pump does not run more than strictly necessary in order to properly prime the main pump. It then continues for another few minutes to ensure proper operation, and then shuts off.

The priming pump is inactive until it becomes necessary to prime the main pump again. The entire process is fully automatic.

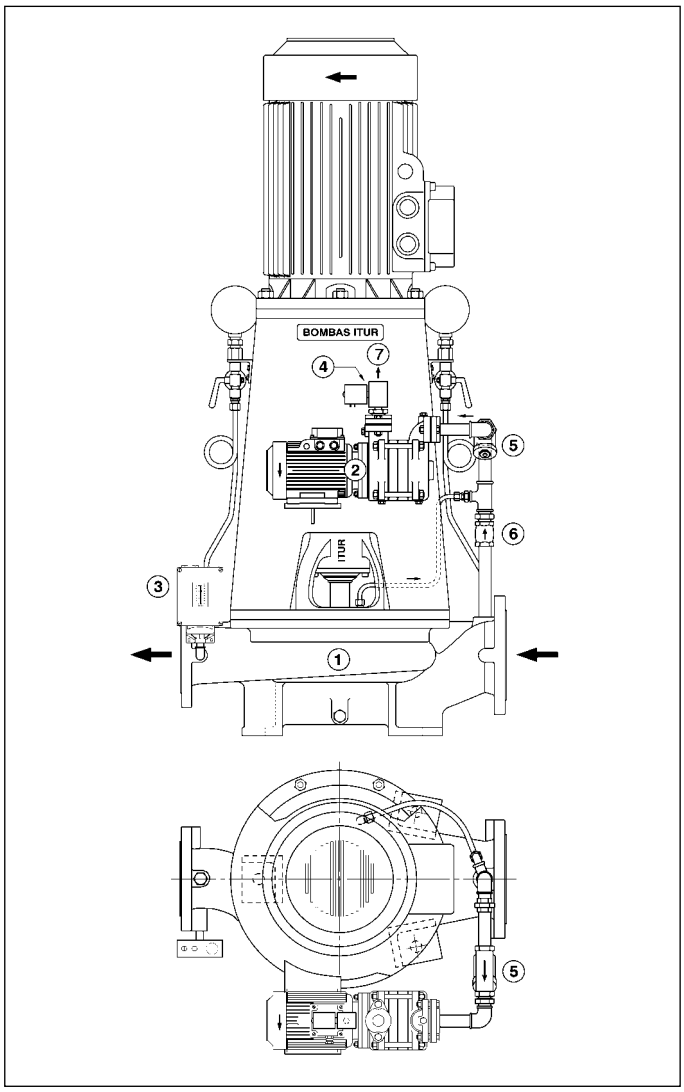

INTERCHANGEABILITY OF PARTS

In the IL or ILS series the components shown in the top line of the table are standardized and interchangeable among the different models of pumps which have the same letter in the part.

Example: the shaft for pump model 50/315 is identical and interchangeable with model 150/200, since the letter C appears in the shaft column for both.

The advantage of this standardization is that with a minimum amount of stock in parts, quick and handy maintenance is ensured for a variety of different pump models.

PART		Support	Bearing	Protection washer	Pump shaft	Mechanical seal	Impeller nut	Impeller key	Casing cover
Reference		*350*	*321*	*554*	*210*	*433*	*922*	*940*	*161*
SIZE OF PUMP	32/160	A	A	A	A	A	A	A	2
	32/250	A	A	A	B	B	B	B	4
	40/160	A	A	A	A	A	A	A	2
	40/250	A	A	A	B	B	B	B	4
	50/160	A	A	A	A	A	A	A	2
	50/200	A	A	A	B	B	B	B	5
	50/250	A	A	A	B	B	B	B	4
	65/125	A	A	A	B	B	B	B	6
	65/160	A	A	A	B	B	B	B	7
	65/200	A	A	A	B	B	B	B	5
	80/160	A	A	A	B	B	B	B	7
	40/315	B	B	B	C	C	C	C	8
	50/315	B	B	B	C	C	C	C	8
	65/250	B	B	B	C	C	C	C	9
	65/315	B	B	B	C	C	C	C	8
	80/200	B	B	B	C	C	C	C	10
	80/250	B	B	B	C	C	C	C	9
	80/315	B	B	B	C	C	C	C	11
	100/190	B	B	B	C	C	C	C	10
	100/200	B	B	B	C	C	C	C	10
	100/250	B	B	B	C	C	C	C	12
	100/315	B	B	B	C	C	C	C	11
	125/240	B	B	B	C	C	C	C	12
	125/250	B	B	B	C	C	C	C	12
	150/200	B	B	B	C	C	C	C	13
	150/250	B	B	B	C	C	C	C	12
	200/240	B	B	B	C	C	C	C	14
	200/250	B	B	B	C	C	C	C	14
	80/400	C	C	C	D	D	D	D	15
	100/400	C	C	C	D	D	D	D	15
	125/315	C	C	C	D	D	D	D	16
	125/400	C	C	C	D	D	D	D	17
	150/315	C	C	C	D	D	D	D	16
	150/400	C	C	C	D	D	D	D	17
	200/330	C	C	C	D	D	D	D	18

Ref.	Description
1	Main centrifugal pump
2	Auxiliary priming pump
3	Pressure switch
4	Electrovalve
5	Strainer
6	Check value
7	Air outlet

SELECTION CHART

50 Hz

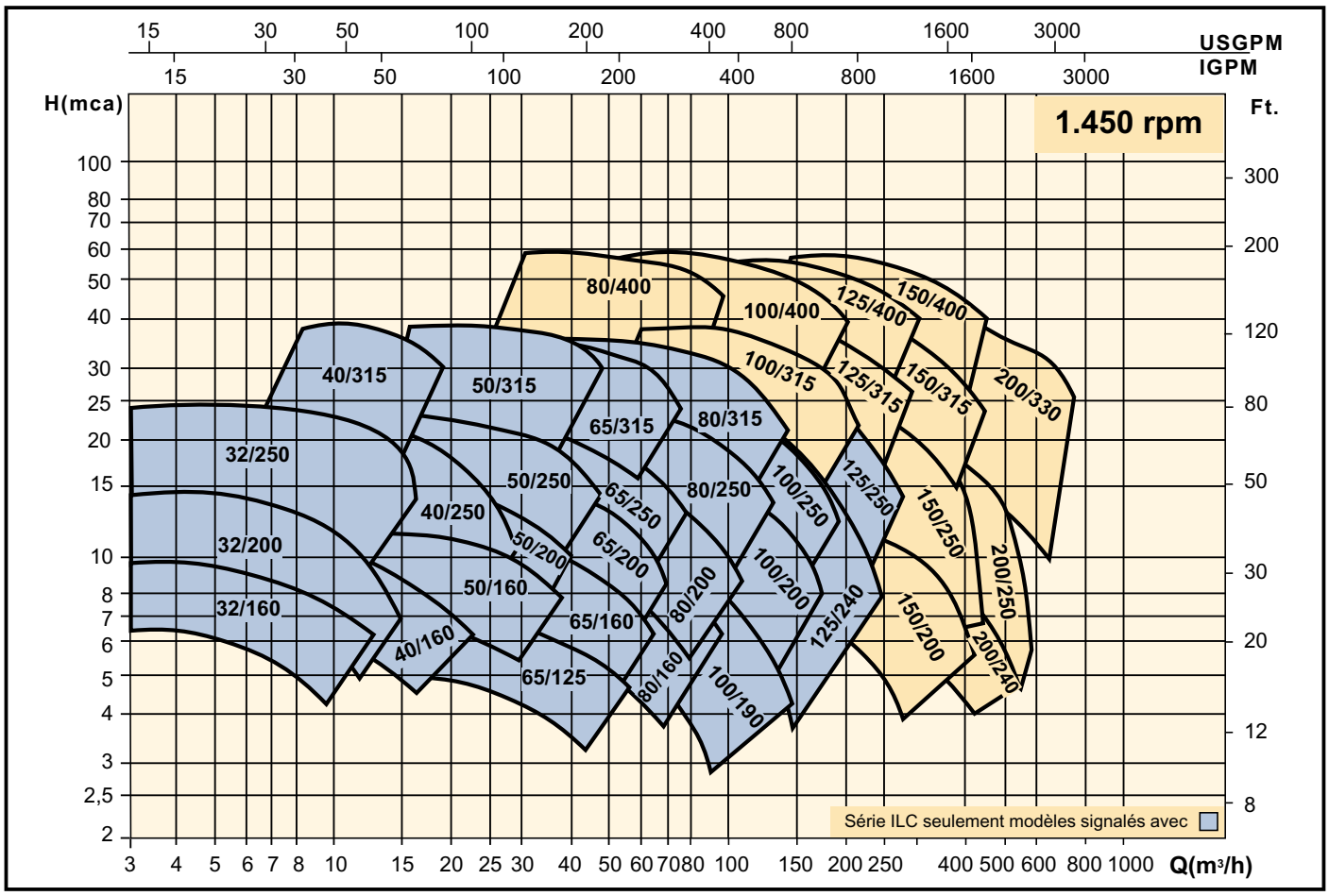

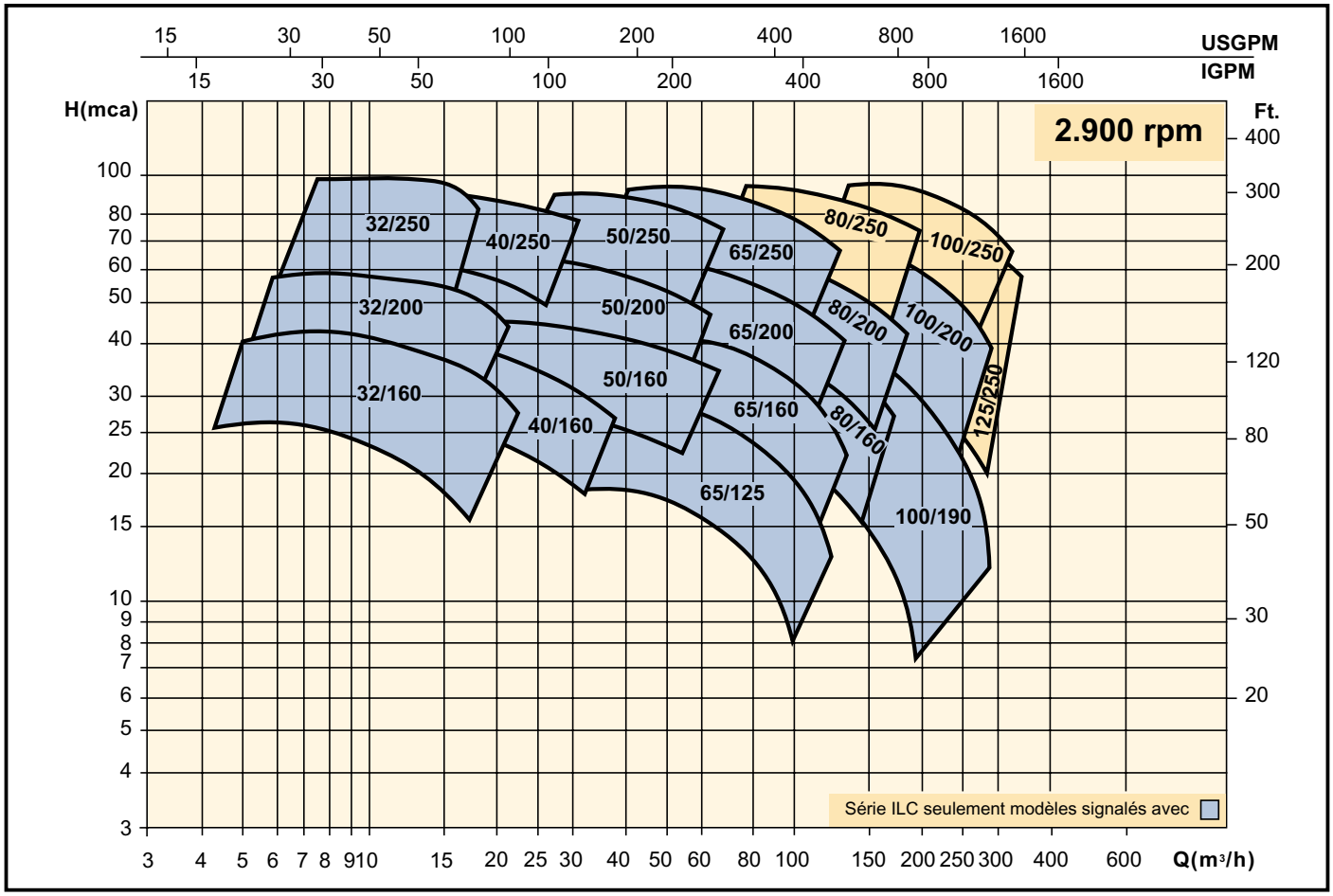

SELECTION CHART

60 Hz

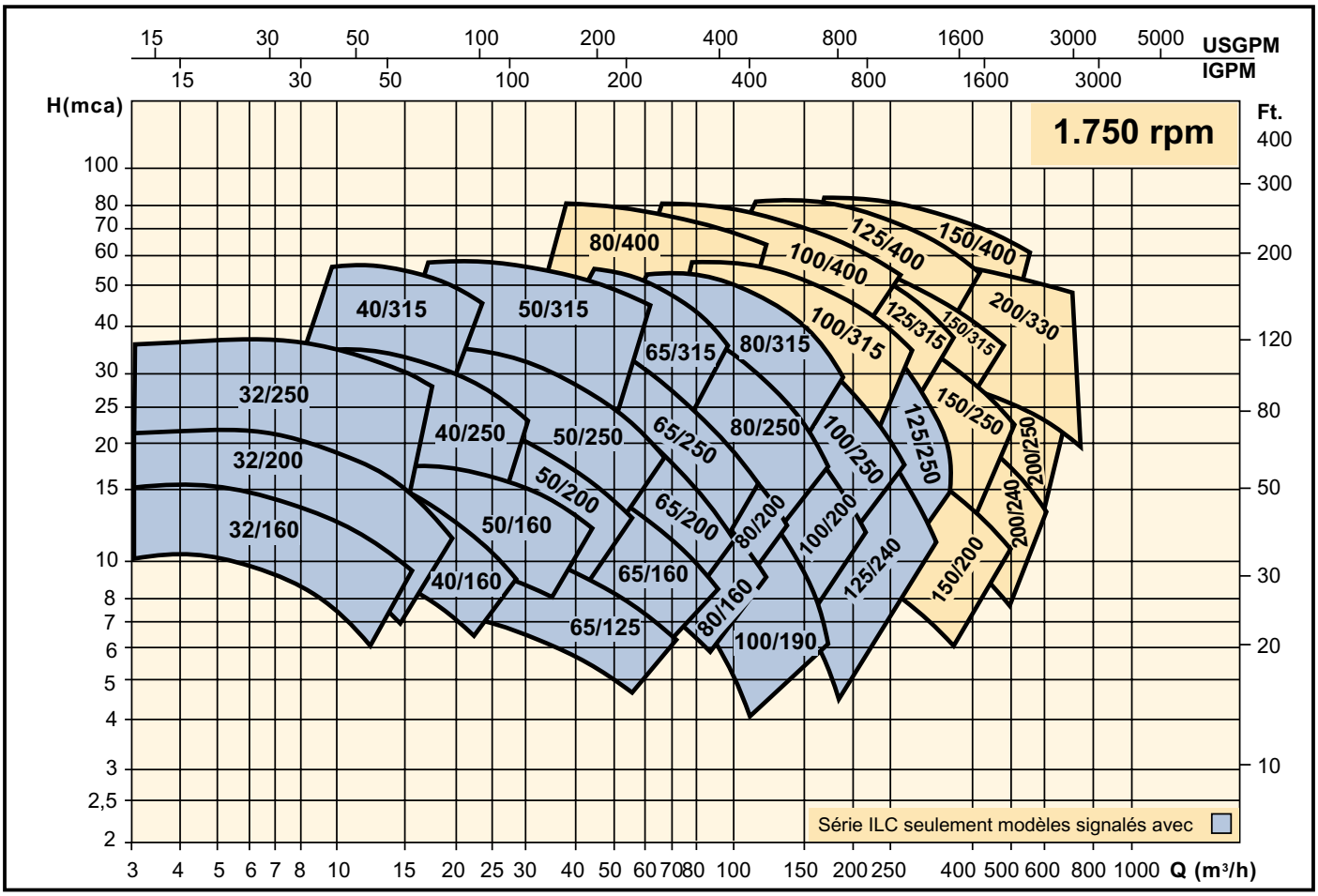

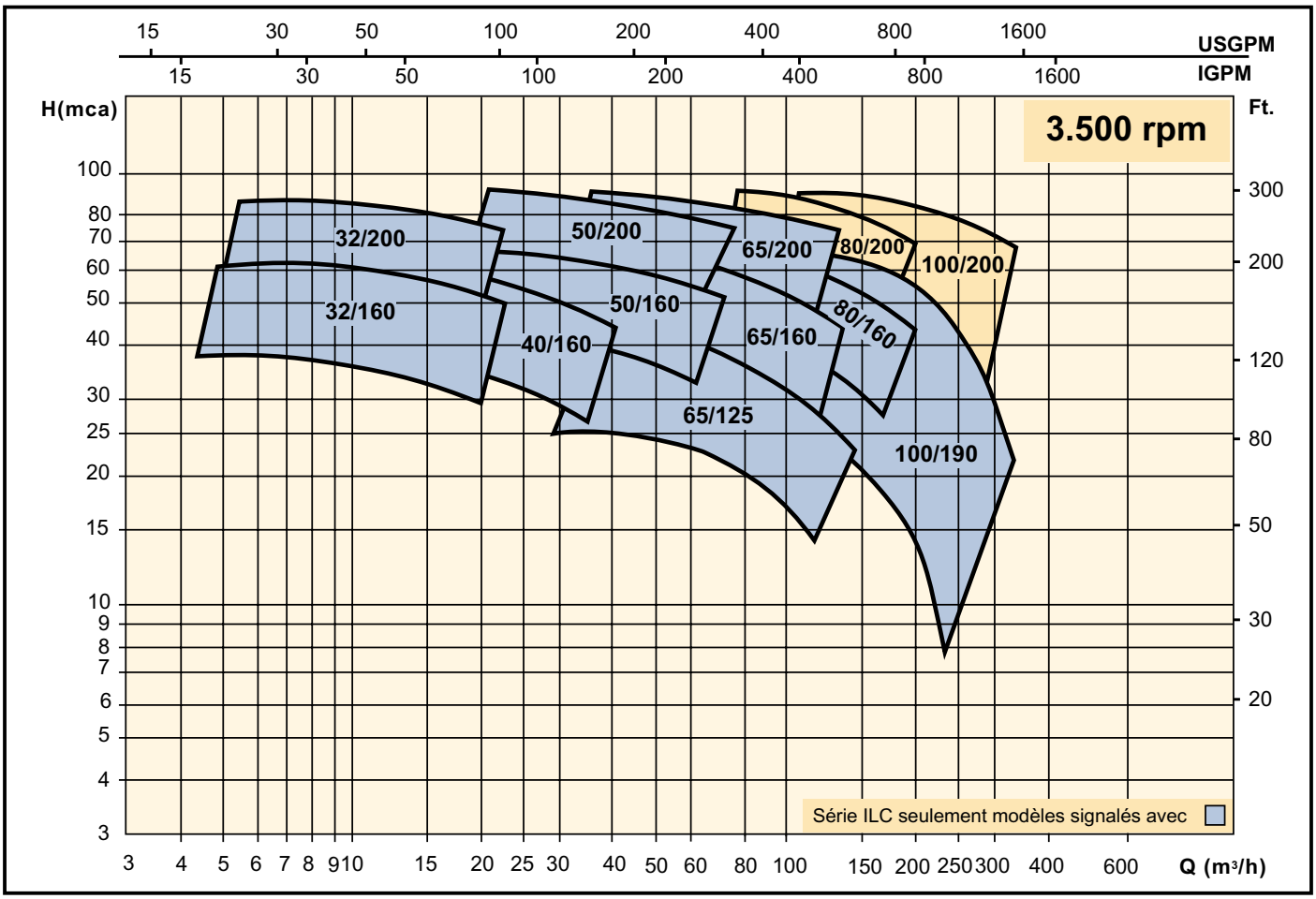

PUMPS ITUR

CROSS SECTION WITH PARTS LIST

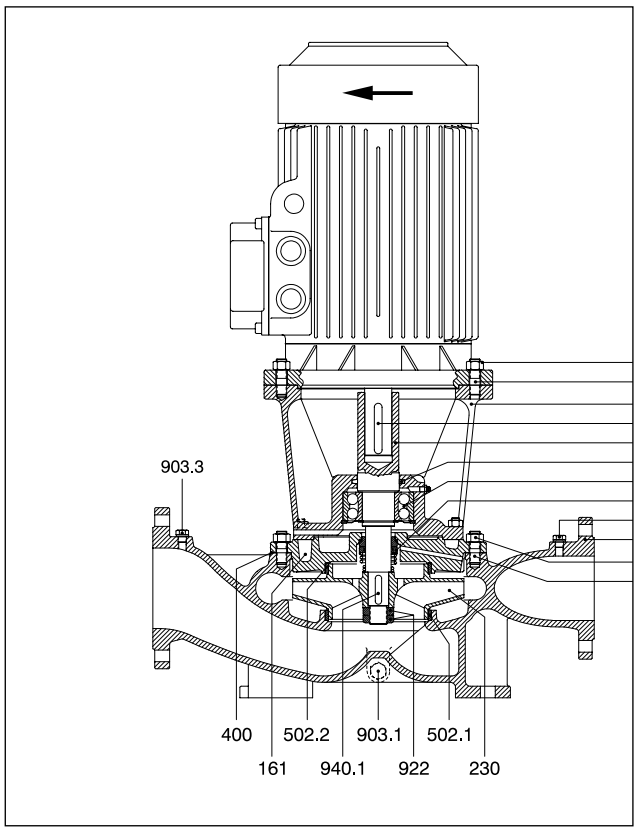

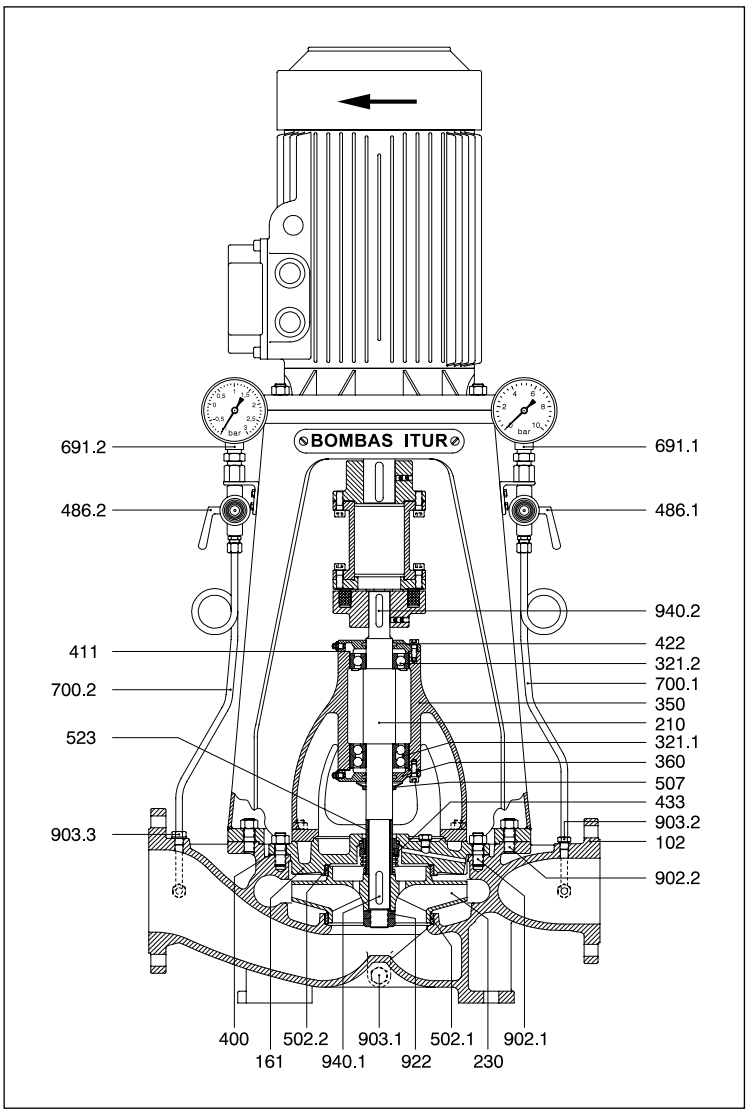

Ref.	Description
102	Pump casing
161	Pump cover
210	Pump shaft
230	Impeller
321.1	Bearing
321.2	Bearing
350	Bearing support
360	Bearing cover
400	Casing joint
411	Support joint
422	Felt ring
433	Mechanical seal
486.1	Manometric valve
486.2	Vacuum-measuring gauge valve
502.1	Wear ring, casing
502.2	Wear ring, cover
507	Deflector
523	Shaft sleeve (optional)
691	Manometer
691.2	Vacuum-measuring gauge
700.1	Manometric pipe
700.2	Vacuum-measuring gauge pipe
902.1	Bolt, casing
902.2	Bolt, support
903.1	Drainage cap
903.2	Venting cap
903.3	Priming cap
920.1	Nut
920.2	Nut
922	Impeller nut
940.1	Impeller pin
940.2	Connecting pin

DIMENSIONS

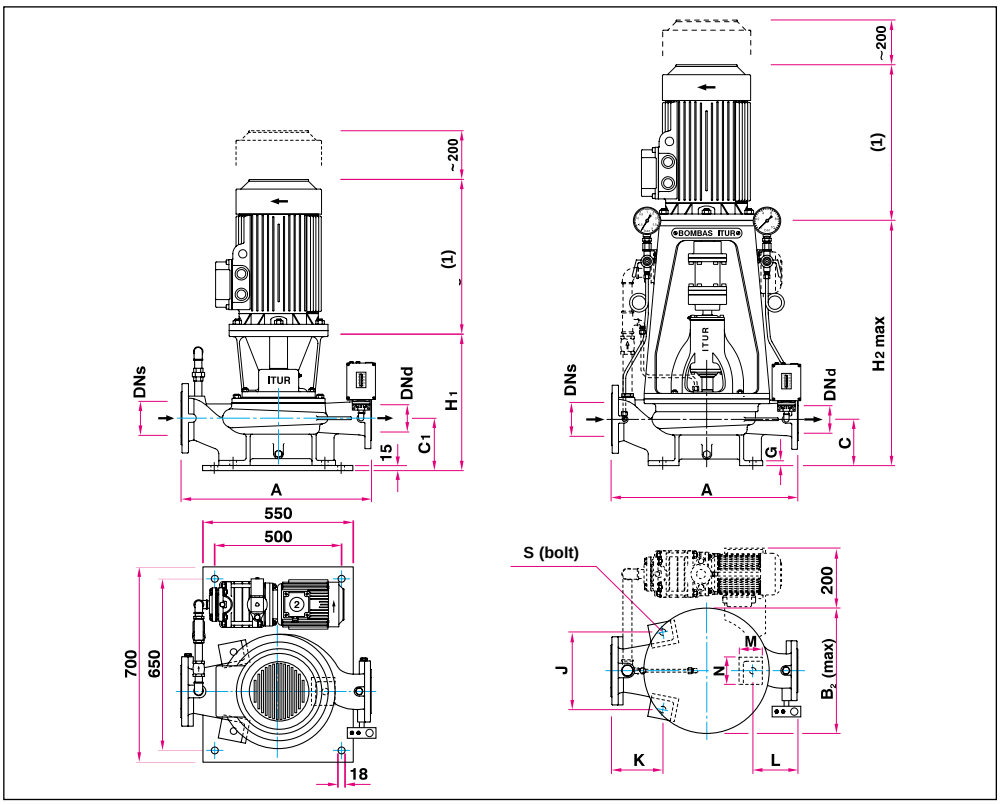

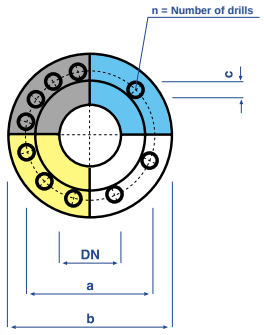

(1) Depending of motor size.
(2) Ø Anchor bolt diameter.
(3) n = Number of drills.

FLANGES				
DN	a	b	c	n
32	100	140		4
40	110	150		
50	125	165		
65	145	185	18	
80	160	200		8
100	180	220		
125	210	250		
150	240	285		
200	295	340	23	
250	350	395		12

PUMP	Flanges		Pump dimensions (mm)													Weight without motor (Kg)			
TYPE	DNs	DNd	A	B_1	B_2	C	G	H_1	H_2	J	K	L	M	N	S	IL	ILC	ILS	ILCS
32/160	50	32	480	245	340	100	15	334	680	200	140	125	85	100	M.20	70	49	130	69
32/200	50	32	390	285	-	100	15	344	-	230	125	125	85	100	M.20	-	61	-	81
32/250	50	32	600	330	460	110	15	344	720	230	160	160	85	100	M.20	155	75	215	95
40/160	65	40	480	260	340	120	15	354	730	200	140	125	85	100	M.20	71	50	131	70
40/250	65	40	610	345	460	125	15	359	735	230	160	170	85	100	M.20	155	75	215	95
40/315	65	40	702	395	530	125	15	439	845	225	197	205	85	100	M.20	192	110	252	130
50/160	65	50	500	295	340	120	12	354	730	160	150	170	58	70	M.20	73	52	133	72
50/200	65	50	550	295	390	125	15	359	735	195	140	155	80	90	M.20	113	63	173	83
50/250	65	50	615	350	460	125	15	359	805	230	162	173	85	100	M.20	160	81	220	101
50/315	65	50	710	405	530	125	15	439	845	225	190	220	85	100	M.20	205	120	265	140
65/125	80	65	475	275	310	140	15	374	750	230	150	100	85	100	M.20	78	58	138	78
65/160	80	65	520	295	390	140	15	374	750	210	135	125	80	80	M.20	86	65	146	85
65/200	80	65	550	325	390	140	15	374	790	230	135	135	85	100	M.20	127	77	187	97
65/250	80	65	615	340	460	140	15	455	930	230	163	172	85	100	M.20	190	110	250	130
65/315	80	65	700	440	530	140	15	454	930	255	200	200	85	100	M.20	203	138	263	158
80/160	100	80	490	345	345	140	12	374	790	230	130	110	80	80	M.20	94	69	154	89
80/200	100	80	575	310	390	150	15	465	940	250	160	125	85	100	M.20	115	94	175	114
80/250	100	80	667	395	460	150	15	465	940	255	179	188	85	100	M.20	198	118	258	138
80/315	100	80	725	455	530	150	18	465	940	255	210	215	85	100	M.20	243	150	303	170
80/400	100	80	820	-	650	165	20	-	1015	310	190	220	120	120	M.24	305	-	365	-
100/190	125	100	600	310	390	160	18	475	950	280	160	110	85	100	M.20	173	113	233	133
100/200	125	100	600	310	390	160	18	475	950	280	160	110	85	100	M.20	175	115	235	135
100/250	125	100	685	425	460	170	18	485	960	285	190	165	85	100	M.20	216	133	276	153
100/315	125	125	775	-	530	170	18	-	960	290	250	210	85	100	M.20	239	-	299	-
100/400	125	100	820	-	650	165	20	-	1025	310	190	220	120	120	M.24	331	-	391	-
125/240	150	125	758	505	505	175	18	492	1005	350	185	148	120	120	M.20	222	140	282	160
125/250	150	125	758	505	505	175	18	492	965	350	185	148	120	120	M.20	223	141	283	161
125/315	150	125	755	-	530	175	18	-	1025	350	185	145	120	120	M.20	320	-	380	-
125/400	150	125	875	-	650	180	20	-	1050	340	200	205	120	120	M.24	351	-	411	-
150/200	200	150	830	-	555	250	18	-	1060	410	250	140	120	120	M.24	252	-	312	-
150/250	200	150	850	-	505	200	18	-	1005	385	230	185	120	120	M.20	319	-	379	-
150/315	200	150	850	-	540	200	18	-	1050	385	230	185	120	120	M.20	338	-	398	-
150/400	200	150	930	-	650	220	25	-	1090	390	250	215	110	110	M.24	373	-	433	-
200/240	200	200	850	-	585	260	20	-	1005	390	220	170	120	120	M.24	320	-	380	-
200/250	200	200	850	-	585	260	20	-	1135	390	220	170	120	120	M.24	324	-	384	-
200/330	250	200	990	-	662	280	20	-	1172	430	305	220	120	120	M.24	386	-	446	-

NOTE:
ITUR Pumps practices a policy of continual development of its models.
For this reason specifications are subject to change without notice.

BOMBAS ITUR, S.A.

P. O. Box, 41
20800 ZARAUTZ (Gipuzkoa) SPAIN
Tel.: +34 943 899 899 • Fax: +34 943 130 710
E.mail:comexp@itur.es • http://www.itur.com

PUMPS ITUR

CI-IL/A238-7 (09/02)